Name Solution

Real Time Computing Systems
EE 4770
Midterm Examination

18 March 1998, 7:30-9:30 CST

Problem 1	_____	(35 pts)
Problem 2	_____	(30 pts)
Problem 3	_____	(35 pts)
Exam Total	_____	(100 pts)

Alias Solution

Good Luck!

Problem 1: Design a system to convert temperature, $x \in [150\,\mathrm{K}, 300\,\mathrm{K}]$, to a floating point number, `temp` $= H(x) = x/\,\mathrm{K}$, using the new Transducer Z. An algebraic model function for the new Transducer Z is not available but a lookup table, `HtZ`, is. Table `HtZ` is a 4096-element array which stores the resistance of the sensor in ohms from a temperature of 100 K (`HtZ[0]=870`) to 400 K (`HtZ[4095]=6500`). (The temperature range covered by the lookup table is larger than is needed for this problem.) The relationship between the array index and temperature is linear. (The relationship between temperature and resistance is *not* linear.) An inverse table, `HtZi` is also available; element zero, `HtZi[0]=100`, gives the temperature in Kelvins when the resistance is $870\,\Omega$ and `HtZi[4095]=400` gives the temperature when the resistance is $6500\,\Omega$. The relationship between array index and resistance is also linear. The resistance of the new Transducer Z is $1200\,\Omega$ at 150 K and $5000\,\Omega$ at 300 K.

(a) Design the conditioning circuit and interface routine. If the gain/offset amplifier is used, the solution can show values for A_5 and O_5 instead of each resistor and voltage source, otherwise show all component and supply values. Show the code for any specialized procedures called.

- The design should use a 12-volt, 16-bit ADC and make full use of its dynamic range.
- Use interpolation to attain maximum precision.

(25 pts)

The conditioning circuit must convert the transducer output, resistance in $[1200\,\Omega, 5000\,\Omega]$ to a voltage $[0, 12\,\mathrm{V}]$. Since the minimum resistance is greater than zero a gain offset circuit will be used. Component values are chosen to satisfy $0 \le H_\mathrm{c}(H_\mathrm{t}(x)) \le 12\,\mathrm{V}$ over $x \in [150\,\mathrm{K}, 300\,\mathrm{K}]$. Applying H_c for the gain offset circuit: $0 \le A_5(H_\mathrm{t}(x) - O_5) \le 12\,\mathrm{V}$. To make full use of the ADC dynamic range choose component values so the ADC input is 0 V at 150 K and 12 V at 300 K by simultaneously solving $0 = A_5(H_\mathrm{t}(150\,\mathrm{K}) - O_5)$ and $A_5(H_\mathrm{t}(300\,\mathrm{K}) - O_5) = 12\,\mathrm{V}$. Solving the first yields $O_5 = H_\mathrm{t}(150\,\mathrm{K}) = 1200\,\Omega$; substituting and solving the second equation yields

$$A_5 = \frac{12\,\mathrm{V}}{H_\mathrm{t}(300\,\mathrm{K}) - O_5} = \frac{12\,\mathrm{V}}{5\,\mathrm{k}\Omega - 1.2\,\mathrm{k}\Omega} = 3.159\,\mathrm{mA}.$$

The interface routine will convert the ADC output to ohms and then to a table index. To find the interface routine function to convert to ohms solve $H_{\mathrm{f}-\Omega}(H_\mathrm{ADC}(H_\mathrm{c}(y))) = y/\,\Omega$, where y is the transducer resistance. (We're not solving for temperature here.) Letting $r = H_\mathrm{ADC}(H_\mathrm{c}(y))$, the ADC output, and solving for y yields:

$$y = r\frac{12\,\mathrm{V}}{2^{16}-1}\frac{1}{A_5} + O_5 = 0.05798r\,\Omega + 1.2\,\mathrm{k}\Omega.$$

To find the table entry the resistance ($[1200\,\Omega, 5000\,\Omega]$) must be linearly mapped to table index ($[0, 4095]$). The index will be found as a floating-point number and then truncated to an integer. The integer portion will be used to perform two table lookups, of the two entries closest to the floating-point entry. A temperature value will be interpolated from those two.

```
int    r = readInterface();
double resist = 0.05798 * r + 1200; /* Resistance in ohms. */
double indD = ( resist - 870. ) * 4095. / ( 6500. - 870. );
int    indI = indD;  /* Truncate to integer. */
double temp_rough = HtZi[indI];  /* This is un-interpolated temp. Not used. */
double temp = HtZi[indI] + ( HtZi[indI+1] - HtZi[indI] ) * ( indD - indI );
```

(*b*) Write a procedure that returns the precision of the circuit above (in Kelvins). (The procedure will have to examine the lookup tables.) (10 pts)

Solution:

```
#define RtoI(R) (( (R) - 870 ) * 4095. / ( 6500 - 870 ))

int start = RtoI(1200);
int stop  = RtoI(5000);
double maxdif = 0;

if( stop > 4095 ) stop = 4095;

for( i=start; i<stop; i++)
  if( maxdif < HtZi[i+1] - HtZi[i] ) maxdif = HtZi[i+1] - HtZi[i];

return maxdif * ( start - stop ) / 65536.;
```

Problem 2: (*a*) Design a circuit to convert temperature, $x \in [200\,\mathrm{K}, 300\,\mathrm{K}]$, to a voltage, $H(x) = (x - 200\,\mathrm{K})\frac{10\,\mathrm{V}}{100\,\mathrm{K}}$ using three-wire RTDs with model function $H_\mathrm{t}(x) = 100\,\Omega(1{+}0.0005x/\,^\circ\mathrm{C})$. (RTD resistance is $100\,\Omega$ at $0\,^\circ\mathrm{C}$.) (For reference, $273.15\,\mathrm{K} = 0\,^\circ\mathrm{C}$.) The circuit should compensate for wire resistance and should not use an excessive amount of hardware. Show all supply and component values. *Hint: Derive an alternate model function* $H_\mathrm{ta}(x) = R_\mathrm{a}(1 + \alpha\Delta x)$, *where* $\Delta x = x - 200\,\mathrm{K}$. (30 pts)

Place three-wire RTD in bridge in usual way:

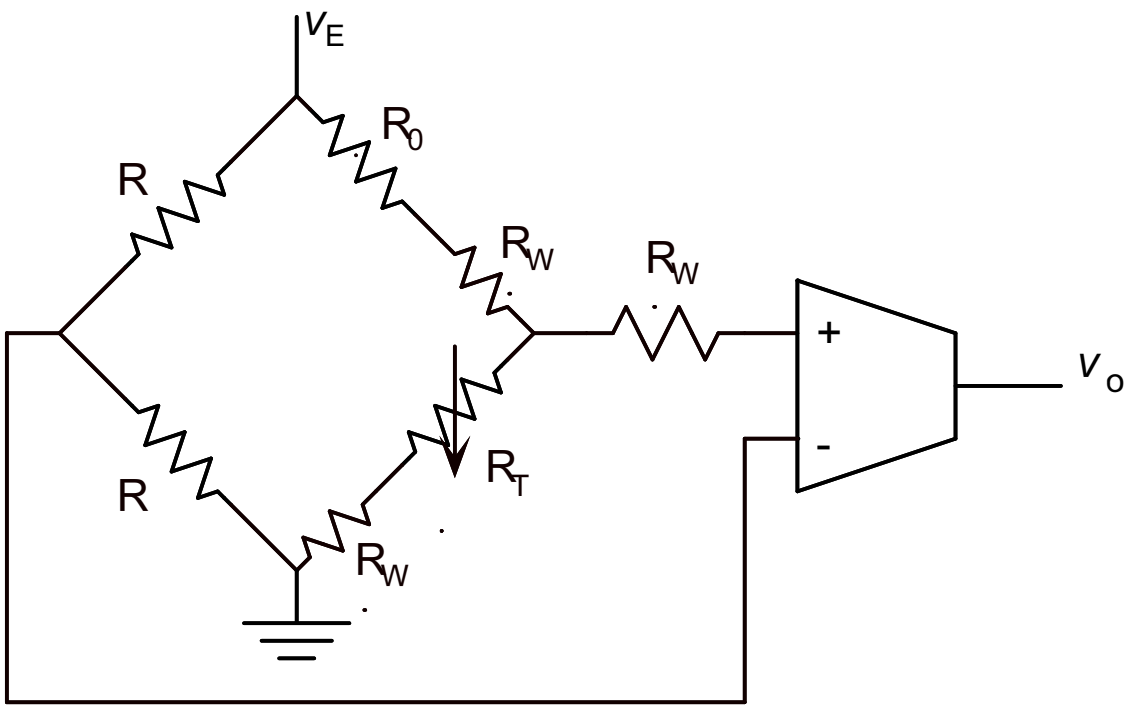

In alternate model function, R_a is RTD resistance at $200\,\mathrm{K}$, $H_\mathrm{t}(200\,\mathrm{K}) = 96.34\,\Omega$. That should be the value chosen for R_0 in the bridge. To easily find α solve

$$H_\mathrm{ta}(0\,^\circ\mathrm{C}) = R_\mathrm{a}(1 + \alpha(273.15\,\mathrm{K} - 200\,\mathrm{K})) = H_\mathrm{t}(0\,^\circ\mathrm{C}) = 100\,\Omega$$

yielding $\alpha = 0.0005189/\,\mathrm{K}$.

To find instrumentation amplifier gain using approximate bridge response solve

$$H_\mathrm{c}(H_\mathrm{ta}(x)) = H(x)$$

$$Av_e\frac{\alpha\Delta x}{4} = \Delta x\frac{10\,\mathrm{V}}{100\,\mathrm{K}}$$

for A, where $\Delta x = x - 200\,\mathrm{K}$. Choosing $v_e = 10\,\mathrm{V}$, the gain is $A = 77.08$.

Problem 3: Answer each question below.

(a) Provide an example of a large-displacement pressure transducer and a small-displacement pressure transducer. For each, give examples of whatever other transducers are necessary to convert pressure to an electrical quantity. Provide an advantage that each one has over the other. (12 pts)

Large-displacement pressure transducer: A bellows-like container connected so that its internal pressure is at the pressure to be measured. A displacement sensor, perhaps a variable resistor, is used to measure the change in size of the bellows with pressure.

Small displacement: a metal diaphragm separating the pressure to be measured from the environment or some other reference pressure. The diaphragm might form one plate of a capacitor, the other plate is held in a fixed position. Pressure is determined by measuring capacitance.

The bellows is lower cost, the diaphragm is more accurate.

(b) Why should the transducers in a cross-correlation speed or flow-rate sensor be close together? (Answer the question for either a speed or a flow-rate sensor.) The answer should describe a situation in which it would be difficult for the sensor to operate if the transducers were far apart but easy to operate if they were close together. (12 pts)

In a flow rate sensor the transducers read the texture of suspended particles in the flow. That texture changes as the fluid progresses down the pipe; by keeping the transducers close together there will be little change from one transducer to the other and so a texture passing under the first transducer will be recognizable when it passes under the second.

Suppose the signal from the first transducer resembles the Baton Rouge skyline when plotted versus time. If the transducers are close together the signal at the second sensor would still resemble Baton Rouge, perhaps with buildings changing height or moving slightly. If the sensors are too far apart the signal at the second sensor might resemble Jackson.

(c) Describe how a single thermistor can be used to measure flow rate (as in a hot-wire anemometer). (11 pts)

The thermistor, placed in the flow, is kept at a constant temperature. The flow rate is determined from the power needed.